HP-20(T)

ISO 9001 CERTIFIED

HEAD OFFICE, NORWAY
DNH AS
Phone..... + 47 35 98 56 00
Fax..... + 47 35 98 56 10
E-mail..... dnh@dnh.no
Web-site..... www.dnh.no

ENGLAND
DNH WW Ltd
Phone..... + 44 1908 275 000
Fax..... + 44 1908 275 100
E-mail.....dnh@dnh.co.uk

GERMANY
DNH GmbH
Phone... + 49 040 6569 30-0
Fax..... + 49 040 6569 30-30
E-mail..... dnh@dnh.de

USA
DNH Speakers Inc
Phone..... + 1 484 494 5790
Fax..... + 1 484 494 5793
E-mail..dnh@dnhspeakers.com

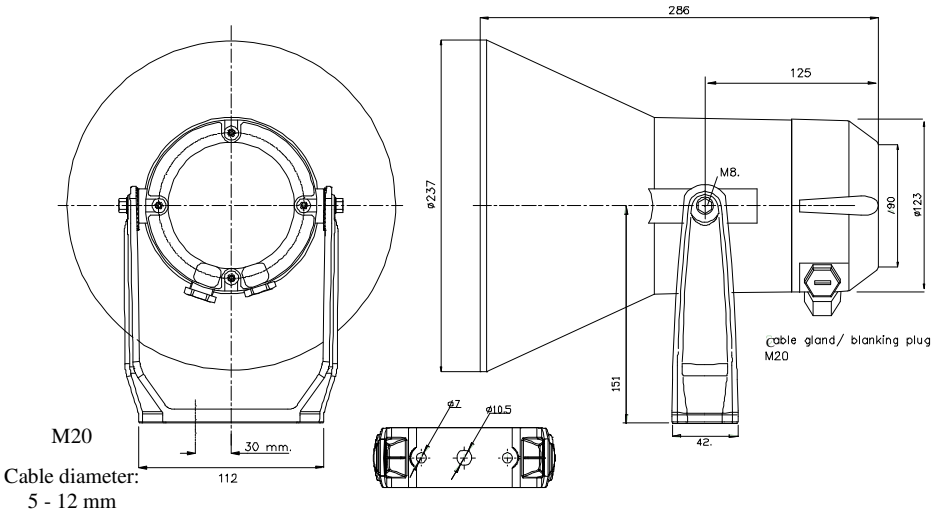

50/70/100 volt Combined Transformer:

Primary connections:
6 : 7 50 Volt line
6 : 8 70 Volt line
6 : 9 100 Volt line

Secondary nominal tappings:
1 : 4 20,0 W
1 : 3 10,0 W
2 : 4 6,0 W
1 : 2 5,0 W
3 : 4 2,0 W
2 : 3 1,5 W

6 = White, 8= Green,
9 = Red

Sound pressure levels at different frequencies at 1W/1m

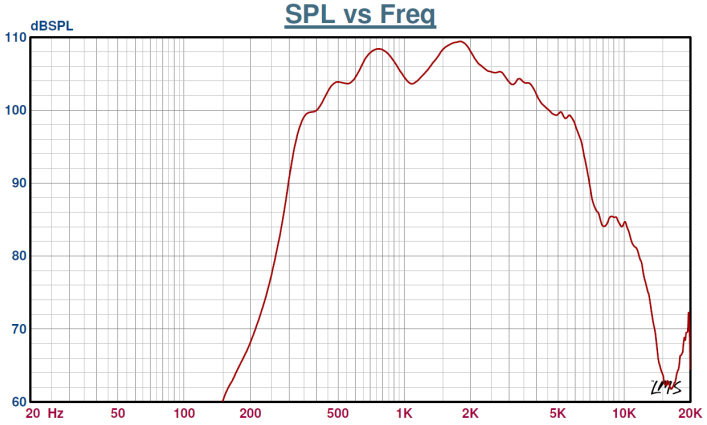

Material / Color .....Polyamide / RAL 7035
Mounting .....Bracket
Termination ..... Inside screw connections
Weight w/ transformer.....2,1 kg
IP-rating 67
Max. / min. amb. temp .....150 °C / -50 °C
Rated / max. power ..... 20 W / 25 W
SPL 1W/1m..... 110 dB
SPL rated power..... 122 dB
Effective freq. range .....310 – 8000 Hz
Dispersion (-6dB) 1kHz / 4kHz.....115° / 30°
Directivity factor, Q(2kHz)..... 9,3
Options..... Impedances, colors, labels

Installation, Operation and Maintenance Procedures

- When mounting the loudspeaker please ensure that it is re-assembled in the same manner in which it was received. Fasten bracket with 1-3 screws.
- To change the position of the loudspeaker please adjust the bracket (by loosening / tightening the screws) as required.
- For optimum performance, always use the correct voltage / power and operate within the frequency limits as stated.
- Do not open loudspeaker when energized.
- Fasten lid with a torque of 2 - 3 Nm.
- This loudspeaker is supplied with a 2 year warranty against defective workmanship.

DNH reserves the right to alter specifications without notice